BALDOR GENERATORS

IDLC750-M

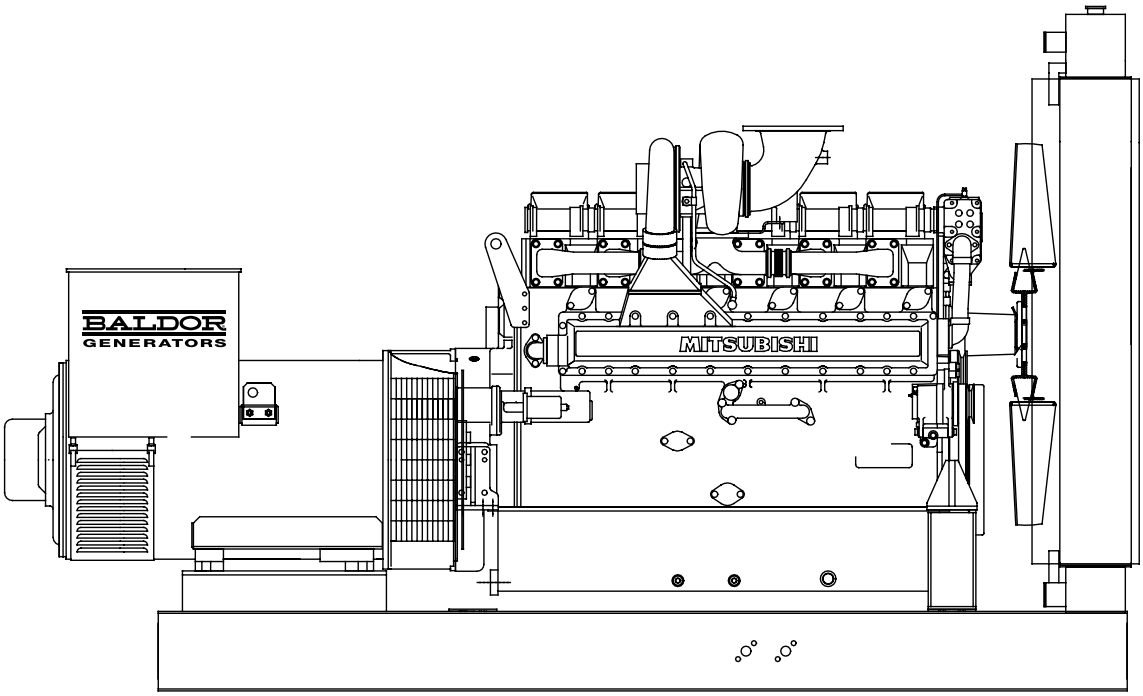

Standby or Prime Power Features

- Heavy-duty industrial diesel engine
- Brushless synchronous alternators: four-pole construction, dynamically balanced
- Full featured microprocessor based controller: fully programmable for maximum flexibility
- Prototype tested and production tested
- Gen-set accepts rated load in one step
- UL2200 available – consult factory
- Optional weather-proof and sound attenuated enclosures available
- Full range of accessories and options available
- Heavy-duty construction for use in prime or standby application
- Manufactured in an ISO-9001 certified facility
- Backed by a world wide network of parts and service center

Gen Set Ratings

Baldor Genset Model	kW Rating Standby	kW Rating Prime	Voltage Hi-Wye	Voltage Low-Wye	Voltage Delta	Number of Leads	Phase	Hz	Power Factor
IDLC750-MA	750	700	480/277	240/139	N/A	12	3	60	0.8
IDLC750-MA	750	700	440/254	220/127	N/A	12	3	60	0.8
IDLC750-MB	750	700	416/240	208/120	240/120	12	3	60	0.8
IDLC750-MB	750	700	380/220	N/A	N/A	12	3	60	0.8
IDLC750-MH	750	700	600/347	N/A	N/A	12	3	60	0.8
IDLC750-MXA	650	600	380/220	N/A	N/A	12	3	50	0.8

NOTES: For ratings and voltages not listed above refer to the Gen-Set Selector or consult factory
Standby ratings do not have an overload capability but can be used for the duration of the utility failure per ISO-3046, DIN6271 and BS5514
Prime (Unlimited Running Time) ratings are continuous per DIN 6271 and ISO-3046 with 10% overload capacity
Base Load (Continuous) ratings are continuous per DIN 6271, BS5514 and ISO-8528 with no sustained overload capacity
Consult factory for Base Load ratings
Altitude derate is 4% for each 1000 feet over 5000
Temperature derate is 1% for 10°F over 100°F ambient

Controls Digital Control Module

MEC2 Features

- Large Backlit LCD with alpha-numeric readout
- Microprocessor Based Design
- 16 programmable alarms/shutdowns set points
- 4 programmable inputs
- Alarm horn
- Not in Automatic Alarm
- Digital Three Phase Voltage and Current Monitoring
- Password Protected Front Panel Programming
- 4 Programmable Outputs
- Local Emergency Stop Switch
- Optional NFPA110 Level I

Engine Protections

- Digital Oil Pressure Gauge
- Digital Water Temperature Gauge
- Digital Battery Voltmeter
- Overspeed Shutdown
- Emergency Stop Shutdown
- Loss of Speed Signal
- Overcrank Shutdown

Designed To Meet/Exceed the Standards Below:

- UL 508
- UL 2200
- NFPA 70
- NFPA 110

Engine Technical Data

Hertz	50Hz		60 Hz	
Manufacturer	Mitsubishi		Mitsubishi	
Engine Model	S12A2-PTA		S12A2-Y1PTA-1	
Engine Type	4Cycle, Water Cooled		4Cycle, Water Cooled	
Aspiration	Turbo-Charged, After Cooler		Turbo-Charged, After Cooler	
No. of Cylinders & Configuration	60˚V, 12		60˚V, 12	
Displacement - cu. in. - liters	2071 (33.93)		2071 (33.93)	
Bore and Stroke - in. - mm	5.91 x 6.30 (150 x 160)		5.91 x 6.30 (150 x 160)	
Compression Ratio	14.5:1		15.3:1	
Air Filter Type	Dry		Dry	
Governor Type	Electronic		Electronic	
Governor Make	Barber Colman		Woodward	
Governor Model	DYNA-8000		Woodward Pro-Act II	
Frequency Regulation, steady state	+/- 0.25%		+/- 0.25%	
Frequency Regulation, no load to full load	Isochronous		Isochronous	
Battery Voltage	24VDC		24VDC	
Water Pump Type	Centrifugal		Centrifugal	
Coolant Cap. - radiator cooled - qts - liters	194 / 183		194 / 183	
Coolant Capacity - engine only - gals - liters	26.4/100		26.4/100	
Oil Pan Capacity - gals - liters	21.1-26.4/80-100		21.1-26.4/80-100	
Rec'd Oil Type - SF/CC/CD-10°F to 90°F	10W-40		10W-40	
Engine Operational Values	**English 50 Hz**	**Metric 50 Hz**	**English 60 Hz**	**Metric 60 Hz**
Maximum ambient temperature - F° - C°	104/122	40/50	104/122	40/50
Heat rejected to coolant - Btu/min - kWm	26,141	459	33,026	580
Max. power at rated rpm - bhp - kWm	1000	746	1207	900
Coolant flow - gpm - lpm	264	1000	291	1100
Exhaust temperature - F° - C°	N/A	N/A	953	512
Exhaust flow - cfm - m^3/min	5,897	167	7450	211
Normal oil press. range idle/run - PSI - kgf/cm^2	29-43/71-86	2-3/5-6	29-43/71-86	2-3/5-6
Max fuel flow to injection pump - gph - Lph	129	490	148	560

BALDOR GENERATORS

Gen Set Technical Data

Alternator Technical Data			
Generator Frame	6	Voltage Regulation NL - FL	+/- 0.5%
Exciter	Brushless	Underspeed Protection	Standard
Cooling Fan	Cast alloy aluminum	Overexcitation Protection	Standard
Bearing	Single, double shielded	Overvoltage Protection	Standard
Connection Type	Reconnectable	Loss of Sensing Protection	Standard
Insulation Type	Class H	Overspeed	2250 RPM
Windings	100% copper	Standards	NEMA, IEC, IEEE, CSA, BS
Pitch	2/3	Phase Sequence	A(U), B(V), C(W)
Amortisseur Winding	Full	TIF (1960 Weightings)	<50
Voltage Regulator	MX321	Excitation System	PMG - Standard

Alternator Performance Data	Model IDLC750-MA	Model IDLC750-MB	Model IDLC750-MH
Temperature rise by resistance - °C (Stand-By)	150/40	150/40	150/40
Generator model number	HCI634G	HCI634H	HCI634G
Generator kW at 125/105/80°C over 40°C ambient (480 Volt , 60Hz)	800/730/632	900/820/720	800/730/632
SkVA output with 30% voltage dip max. 100% recovery at 60 Hz	2400	2700	2400
Maximum SkVA at 90% sustained voltage dip	Consult Baldor	Consult Baldor	Contact Baldor
Subtransient reactance at voltage listed	18.00%	16.00%	16.00%
Line - line harmonic maximum total	5.00%	5.00%	5.00%

Installation/Application Data	English 50 Hz	Metric 50 Hz	English 60 Hz	Metric 60 Hz
Ventilation requirements				
a. Cooling airflow required - cfm - m^3/min (unit mounted radiator)	40,253	1,140	48,728	1,380
b. Combustion air required - cfm - m^3/min	2,225	63	2,825	80
Total ventilation requirements - cfm - m^3/min (a. + b.)	42,478	1,203	51,553	1,460
Maximum cooling air restriction - in.H_20 - in.hg	0.5	0.037	0.5	0.037
Recommended minimum intake louver size (based on "free area")	42.5	1.2	51.6	1.5
a. Heat rejected to ambient, engine - Btu/min - kWm	3,137	55	3,963	70
b. Heat rejected to ambient, generator - Btu/min - kWm	1,850	33	2,135	38
Total heat rejection to ambient - Btu/min (a. + b.)	4,987	88	6,098	108
Exhaust system requirements				
Exhaust gas flow - cfm - m^3/min	5,897	167	7,450	211
Exhaust temperature (dry manifold) - °F - °C	N/A	N/A	953	512
Maximum back pressure - in.H_2O - mm H_2O (inclusive of silencer)	23.6	600	23.6	600
Exhaust outlet size - in. - mm	8	203	8	203
Emissions - NO_X - g/BHP-hr - g/kW-hr	Non-EPA Engine		5.30	7.10
Emissions - HC - g/BHP-hr - g/kW-hr			0.52	0.70
Emissions - CO - g/BHP-hr - g/kW-hr			0.52	0.70
Emissions - PM - g/BHP-hr - g/kW-hr			0.14	0.19
Fuel system requirements				
Fuel consumption - 1/4 load - gph - Lph	12	47	21	79
Fuel consumption - 1/2 load - gph - Lph	24	93	32	122
Fuel consumption - 3/4 load - gph - Lph	37	139	47	176
Fuel consumption - Full load - gph - Lph	49	185	62	235
Heat Exchanger Cooling system requirements				
Minimum raw water (city water) flow - gpm - lps	Consult Baldor		Consult Baldor	
Maximum supply water temperature - ºF - ºC				
Remote Cooling system requirements				
Maximum coolant static head - ft. - m	Consult Baldor		Consult Baldor	
Ventilation required (based on 25°F temp rise) - cfm - lps				

BALDOR GENERATORS

Accessories and Options

Control Panel
- ❑ Louver Relay – 10 Amp
- ❑ Run Relay – 10 Amp
- ❑ Dry Contacts For Alarms
- ❑ Remote E-Stop
- ❑ Control Panel Heater
- ❑ Tachometer
- ❑ Remote Annunciator
- ❑ Remote Communication
- ❑ Panel Lights w/Switch
- ❑ Generator Voltage Adjust
- ❑ Modem For Remote Communication

Engine Exhaust System
- ❑ Industrial Silencer
- ❑ Residential Silencer
- ❑ Critical Silencer
- ❑ Exhaust Flex
- ❑ Exhaust Extension
- ❑ Rain Cap
- ❑ _____

Generator Accessories
- ❑ Main Line Circuit Breaker
- ❑ Exciter Field Circuit Breaker
- ❑ Ground Fault Module w/Breaker Shunt Trip
- ❑ Ground Fault Module w/o Breaker Shunt Trip
- ❑ Reconnectable Link Bars
- ❑ Drip Cover IP22
- ❑ Manual Voltage Control
- ❑ Space Heater
- ❑ RTD's Stator Windings
- ❑ RTD's Bearing (Rear)
- ❑ PMG
- ❑ MVC300 Manual Voltage Control

Engine Electrical System
- ❑ Batteries
- ❑ Battery Rack
- ❑ Battery Cables
- ❑ Battery Charger - Automatic
- ❑ Battery Charger - Trickle
- ❑ _____

Engine Fuel System
- ❑ Day Tank
- ❑ Sub-Base Fuel Tank
- ❑ Storage Tank
- ❑ Flexible Fuel Lines
- ❑ _____

Miscellaneous
- ❑ Weather Proof Enclosure
- ❑ Sound Attenuated Enclosure
- ❑ Trailer Mounted
- ❑ Vibration Isolators
- ❑ Coolant Heater
- ❑ Oil Heater
- ❑ Bypass Oil Filter
- ❑ Export Crating
- ❑ _____
- ❑ _____
- ❑ _____
- ❑ _____
- ❑ _____

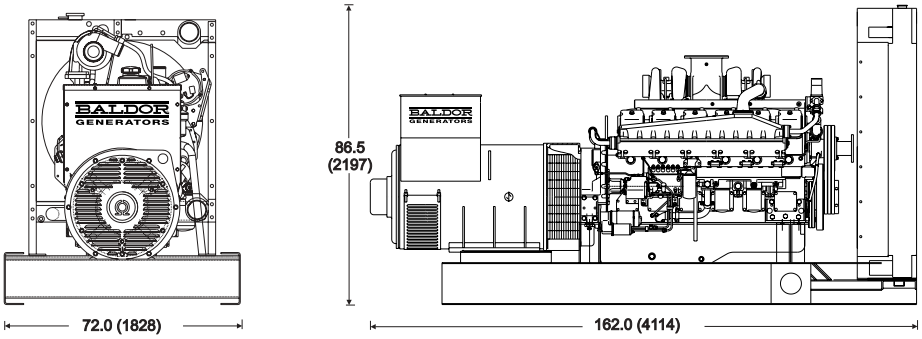

Dimensions – in (mm)

Weight – lbs. (Kg)
12,198 (5973)

Cubes (Approximate)
600 ft

*Open unit configuration, accessories not included

Distributed by:

BALDOR GENERATORS

3815 Oregon Street • Oshkosh, WI 54902 • 1-800-872-7697 • Phone (920) 236-4200 • Fax (920) 236-4219
909 Perkins Drive • Mukwonago, WI 53149 • Phone (262) 363-1555 • Fax (262) 363-1556
World Headquarters
Baldor Electric Company • P.O. Box 2400 • Fort Smith, AR 72902-2400 U.S.A.
Phone (479) 646-4711 • Fax (479) 648-5792 • International Fax (479) 648-5895
www.baldor.com

© Baldor Electric Company

FM2475M

Printed in U.S.A.
10/04 FARR 5000